ROBOTICS 4/M

TOPIC 10: CONTROL

10.1 INTRODUCTION

In order for a robot manipulator to perform its given tasks, the joints must be accurately controlled in order to achieve the desired operational effect. The foundation of control is feedback from sensor information (see Figure 10.1).

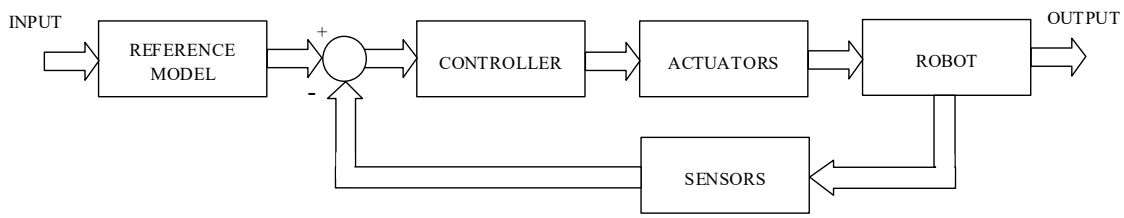

Figure 10.1: Feedback Control Architecture

The feedback sensor information is compared with the desired response for the robot (which is obtained from a reference model for the system). The comparison produces an error that quantifies the difference between the actual and desired response of the robot. This error then drives the controller to produce corrective control action, which takes the form of commanded input signals for the actuators of the robot (i.e. the joint drives). Consequently, the commands make the actuators move the robot in a way that follows the desired response specified by the input commands from the operator.

The operation of the controller depends on the function it has to perform and the joint variables it is controlling. Commonly robot manipulators are used for either position or force control [1,2].

With position control the manipulator follows a prescribed path while performing the task e.g. cutting a groove in a sheet of metal. The groove will be uniform as long as the surface is flat (see Figure 10.2(a)). However, if there is any deviation in the surface profile the groove will not be uniform (see Figure 10.2(b)).

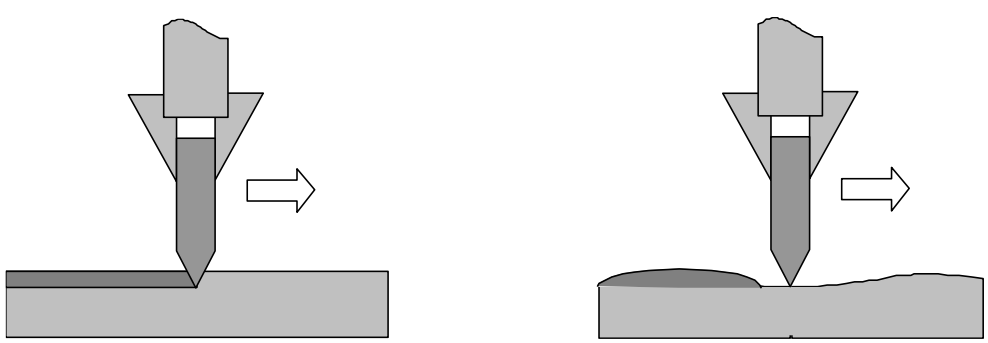

(a) Position Control with Flat Surface (b) Position Control with Uneven Surface

Figure 10.2: Position Control for Cutting Groove Scenario

With force control the manipulator follows a prescribed path but the force that the end effector applies remains at a controlled level. This means that the cutting tool is applied at a constant pressure and follows the contour of the surface. In the case of a flat surface the groove is cut uniformly (see Figure 10.3(a)), in the same way as for position control. For an uneven surface the force controlled manipulator maintains a constant force on the surface and therefore the groove that is cut remains uniform as required (see Figure 10.3(b)).

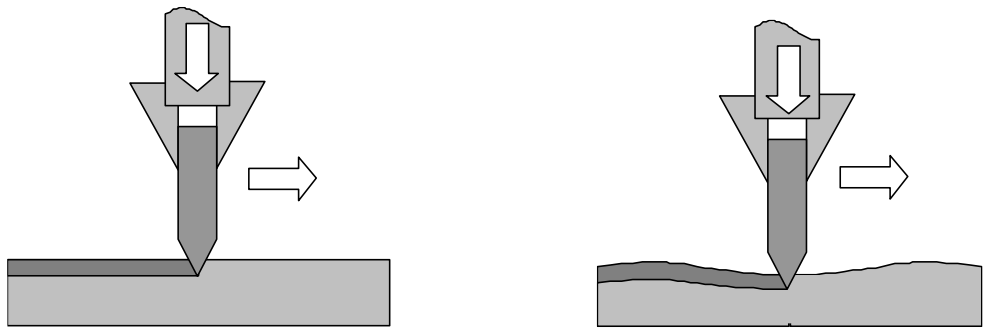

(a) Force Control with Flat Surface (b) Force Control with Uneven Surface

Figure 10.3: Force Control for Cutting Groove Scenario

Both control types are necessary for the operation of robot manipulators. These are dealt with in the following sections.

10.2 POSITION CONTROL

The purpose of position control is to ensure that the robot manipulator follows a prescribed trajectory for the end effector. This means that the controller is used to move the joints of the robot to produce the desired position and orientation of the end effector. For robot manipulators the position control can be implemented with respect to the joints or the end effector. In the former case a *joint space control scheme* is and in the latter an *operational space control scheme* is used.

JOINT SPACE CONTROL

Joint Space Control schemes use the control configuration shown in Figure 10.4.

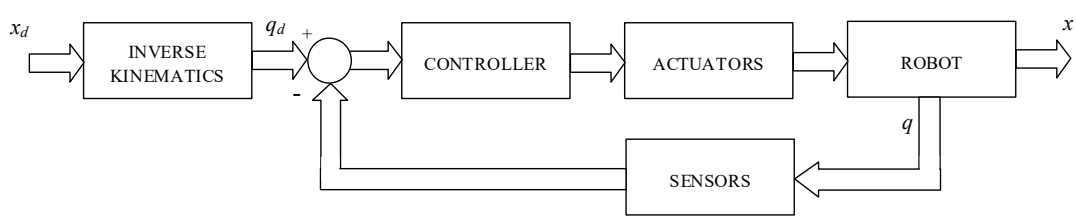

Figure 10.4: Joint Space Control

This configuration uses the joint variables as the feedback components for the controller. The joint variables, q, are compared with the desired joint variables, q_d, to produce an error, which drives the controller. The controller is then used to provide appropriate control action to make the joint actuators move towards the desired joint variables. The desired joint variables are obtained by considering the inverse kinematic relationship between the joint variables and the desired end effector position/orientation, x_d (known as the *operational space variables*). This is the reference that is provided by the operator (using trajectory planning).

However, the main drawback of this approach is that the control loop has no direct connection to the position/orientation of the end effector. The accurate control of the robot relies on transferring the desired operational space variables into the joint space, using the derived inverse kinematics of the robot. If the actual robot construction has introduced variations into the system that are not taken into account in the derive kinematics, then the inverse kinematic reference will be inaccurate. Consequently, the end effector will be positioned incorrectly due to these unmodelled kinematic aspects.

OPERATIONAL SPACE CONTROL

Operational Space Control schemes rely on direct feedback regarding the position and orientation of the end effector (i.e. the operational space variables). These schemes use the control configurations shown in Figure 10.5.

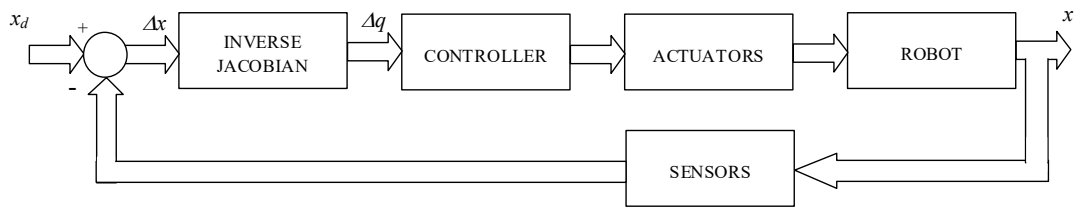

(a) Jacobian Inverse Control Scheme

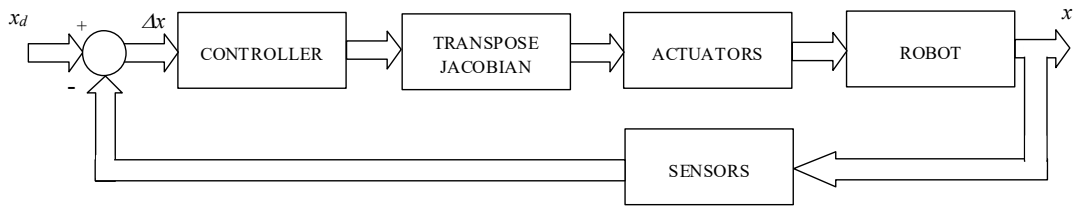

(b) Jacobian Transpose Control Scheme

Figure 10.5: Operational Space Control

These configurations use the operational space variables as the feedback components for the controllers. In the first instance (Figure 10.5(a)) the error between the actual end effector variables, x, and the desired variables, x_d, is regarded as a differential motion. The end effector error, Δx, is then transformed using the inverse Jacobian relationship, into the joint differential motion, i.e. Δq. This error in the position and orientation of the joints is used to drive the controller. The controller makes the joints correct their variables in line with these calculated errors and thus moves the end effector to the desired position/orientation. It follows that the controller is designed with reference to the joint variables in this case.

For the Jacobian Transpose Scheme shown in Figure 10.5(b), the Jacobian transformation occurs after the controller has calculated the control action. The differential error between the desired and actual operational variables drives the controller directly. The controller is designed to produce the desired control action for the end effector. This is transformed using the transpose Jacobian to produce the input commands for the joint actuators. The resulting displacement of the joints makes the robot move in an appropriate manner and the end effector become positioned as desired.

10.3 FORCE CONTROL

In the case of Force Control the position and force of the end effector are both controlled based on the desired force reference. The position ensures that the end effector is correctly positioned (as with position control) and the force component ensures that the force exerted by the end effector is correct for the application concerned.

The configuration of the control structure is shown in Figure 10.6.

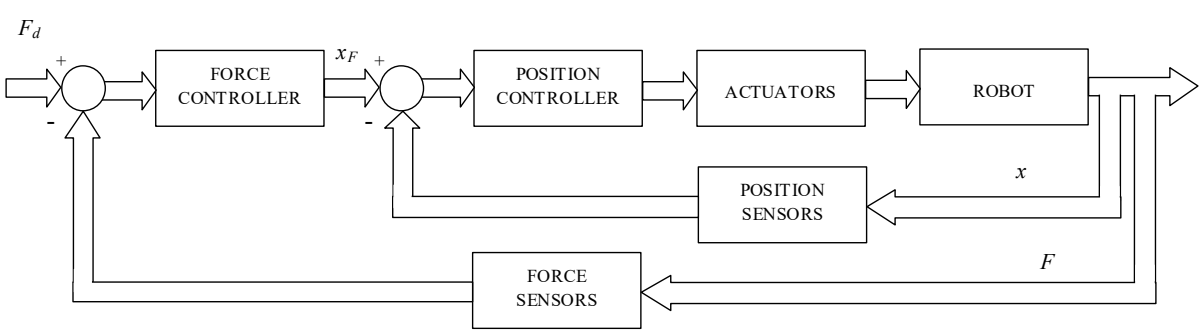

Figure 10.6: Force Control

This configuration differs from the position control configuration by the outer force control loop. This loops feeds back the force at the end effector and compares it with the desired force required. The error between the two force values is applied to the force controller, which produces the required position/orientation for the end effector in order to provide the desired force. This position/orientation is used as the reference for the inner position loop. With the two control systems the robot is able to provide accurate position and force variables for the end effectors.

10.4 PARALLEL FORCE AND POSITION CONTROL

The combined position and force control schemes follow the same controller structure as illustrated in Figure 10.6. The different is in the second summing junction where a desired reference signal is applied i.e.

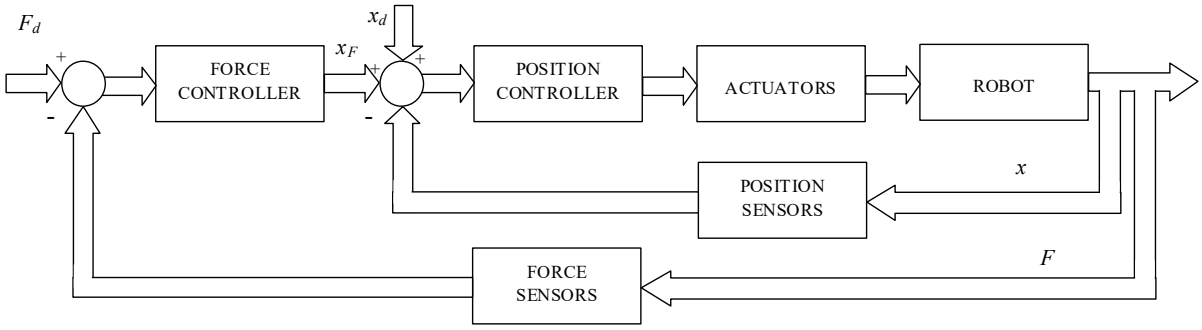

Figure 10.7: Force and Position Control

By adding a desired position/orientation reference, the position controller will drive the system to follow the sum of the reference from the force and the desired position variables. This combined reference will allow the controller to provide sufficient control action to satisfy both the force and position control aspects.

10.5 CONTROLLER APPROACHES

The design of the control system for a robot manipulator depends on the number of control channels that are governed. There are two approaches to this i.e.

- **INDEPENDENT JOINT CONTROL:** This where every joint has its own control system that governs the joint variable on a *single-input, single-output* basis.
- **CENTRALISED CONTROL:** This where all joints are governed by a single control system on a multi-*input, multi-output* basis.

The first approach is easier to apply as the design only involves a single joint in each case. The drawback is that the control system does not compensate for the effects of the other joints in the system. The second approach does take the other joints into consideration when the control system is being designed and implemented. The drawback of that approach is that the design process is extremely complex and difficult to apply.

10.6 CONSTRAINTS

The performance of the robot manipulator depends on the constraints that are imposed on it by the external environment and its own mechanical limitations (i.e. limits in terms of force and positions). These limiting constraints can be broken down into two groupings:

- **NATURAL CONSTRAINTS:** These are constraints on the operation of the manipulator that are imposed by the external environment. The limitations imposed by these constraints define the possible operational space of the robot.
- **ARTIFICIAL CONSTRAINTS:** These constraints are imposed by the physical limitations of the manipulator's mechanisms i.e. joint and link position and orientation limits. The limitations imposed by these constraints define the operational envelop for the manipulator i.e. the workspace.

The combination of the two sets of constraints defines the possible operational limitation of the manipulator for the given task scenario. The manipulator can only operate in areas where both sets of constraints are not reached. When the manipulator's task is being defined these limitations must be considered or the robot will be unable to perform the task. It is therefore essential that these limitations are known before a task is assigned for a manipulator.

10.7 HARDWARE ARCHITECTURE

A general model of the hardware architecture for a robot manipulator's control system is shown in Figure 10.8 [2].

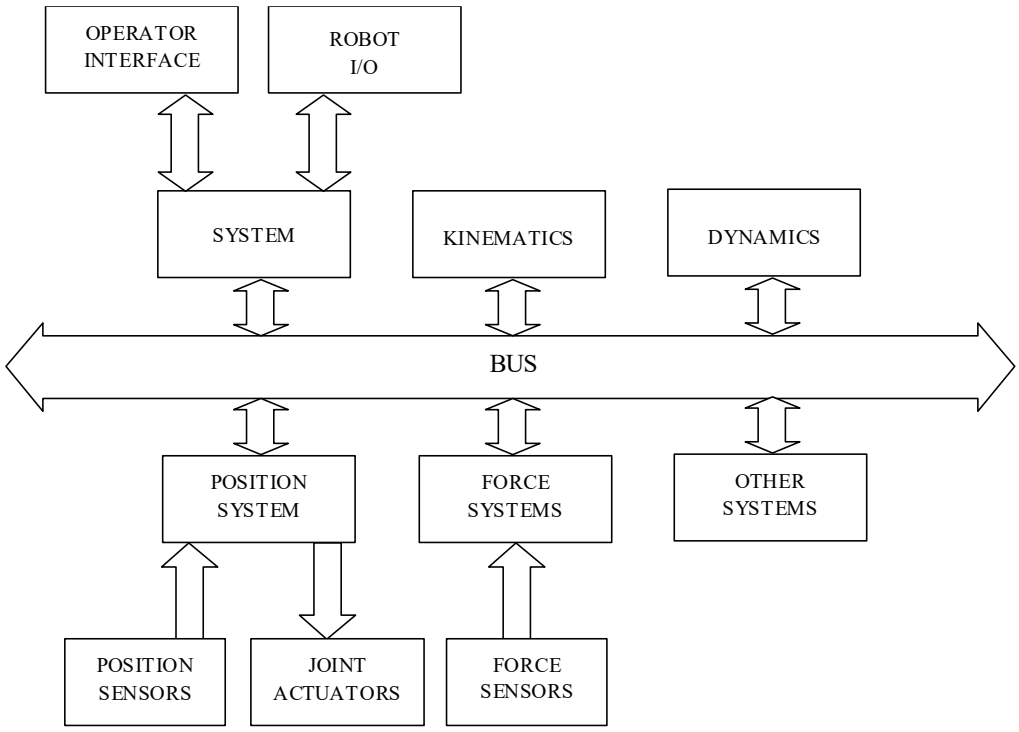

Figure 10.8: Hardware Architecture for Robot Manipulator Control System

The six main blocks connected to the bus are boards that perform specific functions within the control system. The bus allows supporting communication data flow with a large enough bandwidth to satisfy the real-time constraints for such a system.

The main interface board is the *system* board which is typically a CPU endowed with:

- A microprocessor with mathematical coprocessor
- Local RAM memory
- RAM memory shared with other boards through the bus
- A number of serial and parallel ports for interfacing the bus and the external world i.e. the robot
- Counters, registers and timers (for synchronisation)
- An interrupt system

REFERENCES

[1] Niku, S.B., *Introduction to Robotics*, Pearson Education, 2011.
[2] Sciavicco, L. & Siciliano, B., *Modelling and Control of Robot Manipulators*, Springer, 2001.